Problem (1) (35 points)

A rectangular coil carrying a current of $I = 0.50$ A is initially oriented in such a way that its magnetic dipole moment is given by $\vec{\mu} = \mu(0.80\ \hat{\imath} + 0.60\ \hat{\jmath})$ where μ is a positive constant with units A·m^2. A uniform magnetic field $\vec{B} = (4.0\ \hat{\imath} + 3.0\ \hat{k})$ T exists everywhere in space.

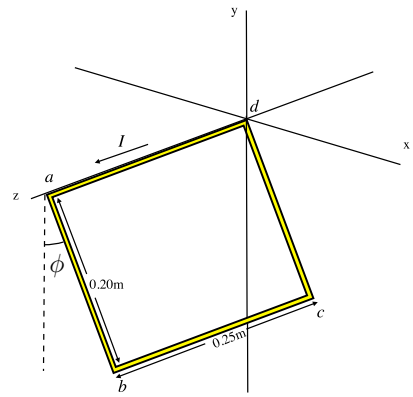

(a) (20 pts.) Find the magnetic torque on the coil in the initial position. Express your answer in unit vector notation.

The magnetic moment of the loop is

$$\vec{\mu} = I\,A(0.80\ \hat{\imath} + 0.60\ \hat{\jmath}) = (0.50\ \text{A})(0.05\ \text{m}^2)(0.80\ \hat{\imath} + 0.60\ \hat{\jmath}) = (0.020\ \hat{\imath} + 0.015\ \hat{\jmath})\ \text{A}\cdot\text{m}^2$$

Then the magnetic torque is:

$$\vec{\tau} = \vec{\mu} \times \vec{B} = (0.020\ \hat{\imath} + 0.015\ \hat{\jmath})\ \text{A}\cdot\text{m}^2 \times (4.0\ \hat{\imath} + 3.0\ \hat{\text{k}})\ \text{T} = 0.015(-4\ \hat{\jmath} - 4\ \hat{\text{k}} + 3\ \hat{\imath})\ \text{N}\cdot\text{m}.$$

(b) (15 pts.) Find the magnetic force on the side bc of the coil in the initial position.

$$\vec{F} = I\vec{\ell} \times \vec{B} = (0.50\ \text{A})(-0.25\ \hat{\text{k}})\ \text{m} \times (4.0\ \hat{\imath} + 3.0\ \hat{\text{k}})\ \text{T} = -0.50\ \text{N}\ \hat{\jmath}.$$

Problem 3 (30 points)

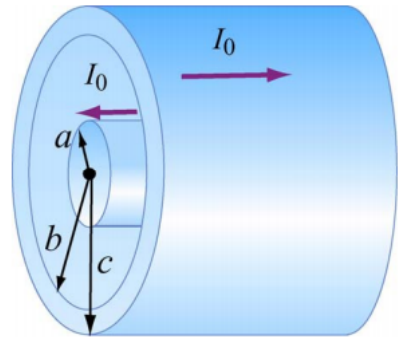

A coaxial cable is made up of a solid cylindrical inner conductor of radius a, surrounded by a concentric cylindrical tube of inner radius b and outer radius c. The conductors carry equal and opposite currents I_0 distributed uniformly across their cross sections as shown in the figure. Determine the magnetic field at a distance r from the central axis for the following regions;

Apply Ampere's Law for each region, draw integration paths and write the line integral of magnetic field around those paths. Coaxial cable is cylindrically symmetric, so that you can draw circular integration paths to use symmetry properties;

(a) (10 pts.) $r < a$

Draw a concentric circle with radius r inside the inner conductor, calculate the amount of current encircled by this circle, since the current is uniformly distributed: $I_{\text{enc}} = JA_{\text{enc}}$,

$$\oint \vec{B} \cdot d\vec{\ell} = \mu_0 I_{\text{enc}} \implies B(2\pi r) = \mu_0 \left(\frac{I_0}{\pi a^2}\right)(\pi r^2) \implies \boxed{B = \frac{\mu_0 I_0 r}{2\pi a^2}}$$

(b) (10 pts.) $a < r < b$

The integration path in this region will encircle the whole current that flows in the inner conductor: $I_{\text{enc}} = I_0$,

$$\oint \vec{B} \cdot d\vec{\ell} = \mu_0 I_{\text{enc}} \implies B(2\pi r) = \mu_0 I_0 \implies \boxed{B = \frac{\mu_0 I_0}{2\pi r}}$$

(b) (10 pts.) $b < r < c$

The integration path in this region will encircle the whole current that flows in the inner conductor and a part of the current that flows on the cylindrical tube: $I_{\text{enc}} = I_0 - I_{\text{tube}}$,

$$I_{\text{enc}} = I_0 - \frac{I_0}{\pi(c^2 - b^2)}\pi(r^2 - b^2)$$

$$\oint \vec{B} \cdot d\vec{\ell} = \mu_0 I_{\text{enc}} \implies B(2\pi r) = \mu_0 I_0 \left[1 - \frac{r^2 - b^2}{c^2 - b^2}\right] \implies \boxed{B = \frac{\mu_0 I_0}{2\pi r}\left[1 - \frac{r^2 - b^2}{c^2 - b^2}\right]}$$

Problem 3 (35 points)

A rectangular circuit with sides of lengths $x = 0.25$ m and $L = 0.50$ m, and $R = 1\ \Omega$ is moved at a constant velocity of $v = 3.0$ m/s through and out of a uniform B =2.0-T magnetic field as shown in the figure. The direction of the magnetic field is into the page. Find the **magnitude** and **direction** (clockwise or counter-clockwise) of the current induced in the circuit for the below positions of the circuit.

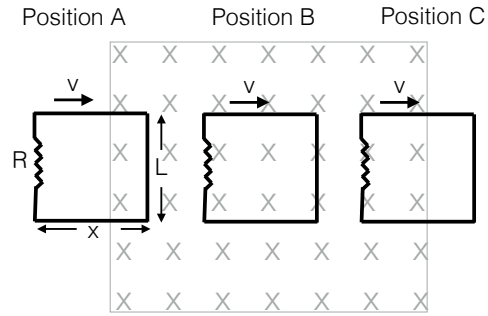

(a) (10 pts.) POSITION A: As the circuit is going into the magnetic field.

The induced emf is $\mathcal{E} = B.L.v = (2.0\ \text{T})(0.50\ \text{m})(3.0\text{m/s}) = 3$ V and the induced current is $I_A = \mathcal{E}/R = 3$ A. Using Lenz's law we find that the current is counter-clockwise.

(b) (10 pts.) POSITION B: As the circuit is totally in the magnetic field, but still moving.

The induced emf zero as the flux is not changing.

(c) (10 pts.) POSITION C: As the circuit is moving out of the magnetic field.

The induced emf is $\mathcal{E} = B.L.v = -(2.0\ \text{T})(0.50\ \text{m})(3.0\text{m/s}) = -3$ V and the induced current is $I_A = \mathcal{E}/R = -3$ A. The minus sign shows that the current is in opposite direction to that in part (a). Using Lenz's law we find that the current is clockwise.
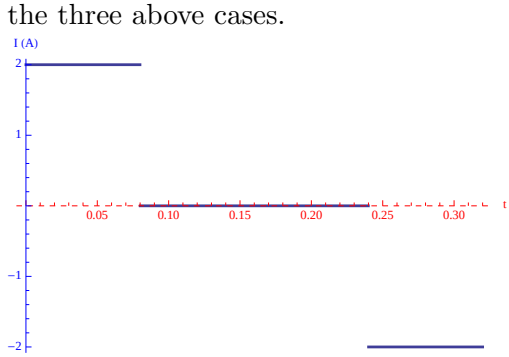
(d) (5 pts.) Sketch a graph of the current in the circuit as a function of time, including the three above cases.